FOR GENERAL INFORMATION SEE DRAWING C-01-830697-141-2804-102-0001

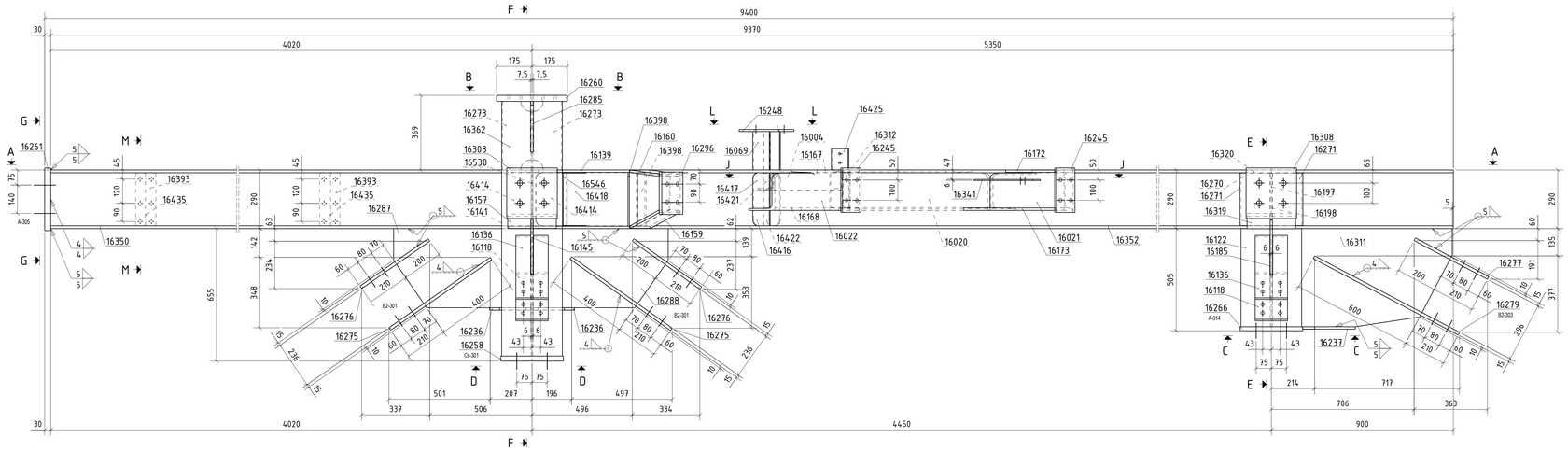

A-A
1:10

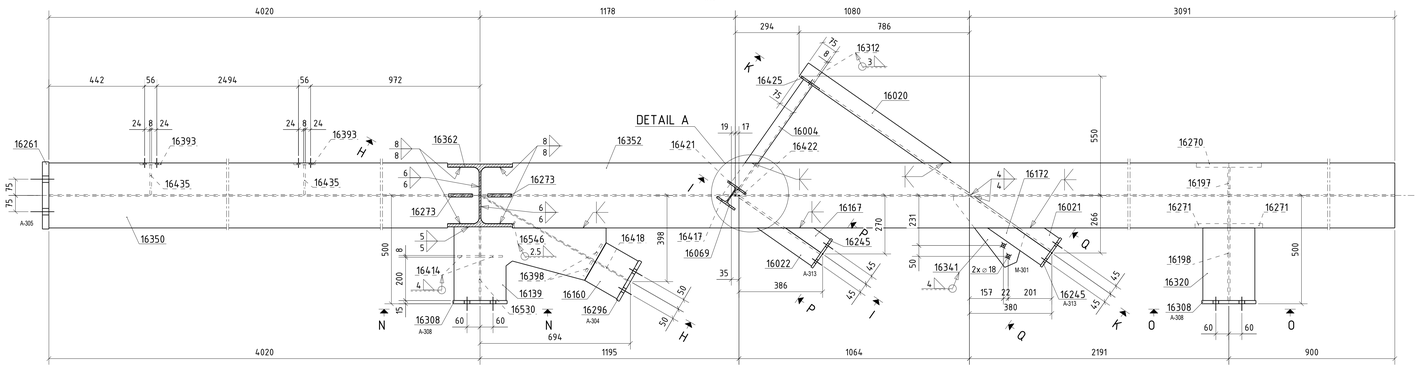

DETAIL A
1:5

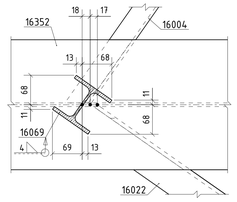

B-B
1:10

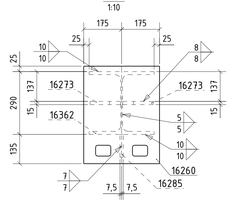

C-C
1:10

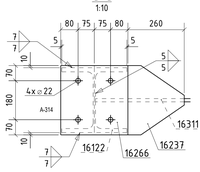

D-D
1:10

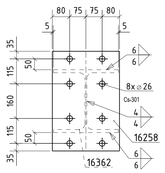

E-E
1:10

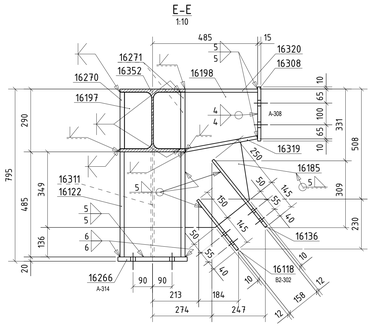

F-F
1:10

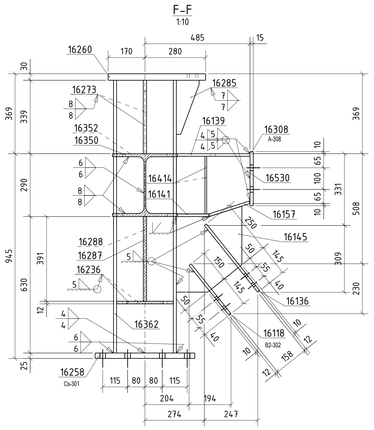

G-G
1:10

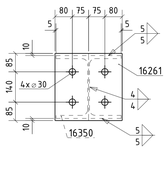

H-H
1:10

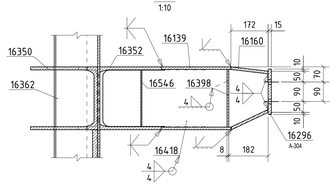

I-I
1:10

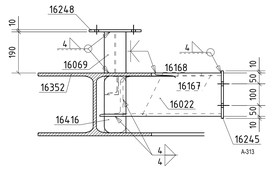

J-J
1:10

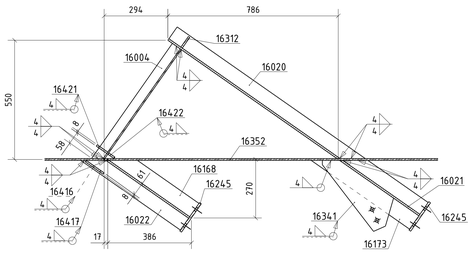

K-K
1:10

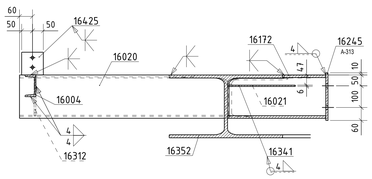

L-L
1:10

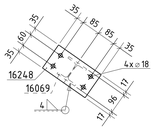

M-M
1:10

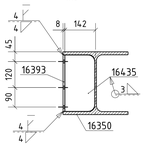

N-N
1:10

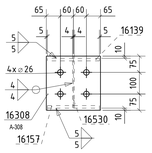

O-O
1:10

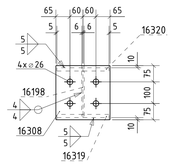

P-P
1:10

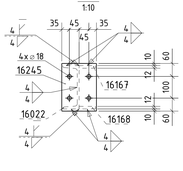

Q-Q
1:10

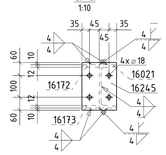

ASSEMBLY № 904 — QUANTITY 1

POSITION	QUANTITY	PROFILE	LENGTH	MATERIAL	WEIGHT
16004	1	U100	649	S235JR	7.4
16020	1	U200	1660	S235JR	27.0
16021	1	U200	447	S235JR	11.5
16022	1	U200	561	S235JR	14.9
16069	1	HEA100	190	S235JR	3.2
16118	2	PL12×160	295	S235JR	8.5
16122	1	HEB300	485	S235JR	56.7
16136	2	PL12×160	395	S235JR	11.2
16139	1	PL12×340	702	S235JR	15.8
16141	1	PL12×247	702	S235JR	11.5
16145	1	PL12×302	396	S235JR	9.3
16157	1	PL12×196	240	S235JR	4.4
16159	1	PL12×184	200	S235JR	3.5
16160	1	PL12×172	200	S235JR	3.2
16167	1	PL12×75	199	S235JR	1.0
16168	1	PL12×75	454	S235JR	2.8
16172	1	PL12×75	299	S235JR	1.7
16173	1	PL12×75	554	S235JR	3.5
16185	1	PL12×297	395	S235JR	9.0
16197	1	PL12×125	260	S235JR	3.0
16198	1	PL12×260	481	S235JR	10.8
16236	2	PL12×206	260	S235JR	9.0
16237	1	PL12×260	320	S235JR	5.2
16245	2	PL10×160	220	S235JR	5.5
16248	1	PL10×130	240	S235JR	2.4
16258	1	PL25×370	460	S235JR+Z15	28.0
16260	1	PL30×350	450	S235JR+Z15	35.5
16261	1	PL30×310	310	S235JR+Z15	22.6
16266	1	PL20×370	320	S235JR+Z15	15.6
16270	1	PL20×260	300	S235JR+Z15	12.2
16271	2	PL20×150	260	S235JR+Z15	12.2
16273	2	PL15×140	339	S235JR+Z15	10.3
16275	2	PL15×240	610	S235JR+Z15	32.9
16276	2	PL15×240	470	S235JR+Z15	22.4
16277	1	PL15×300	470	S235JR+Z15	14.1
16279	1	PL15×305	810	S235JR+Z15	27.4
16285	1	PL15×105	250	S235JR+Z15	1.9
16287	1	PL15×391	680	S235JR+Z15	29.1
16288	1	PL15×391	660	S235JR+Z15	28.5
16296	1	PL15×210	210	S235JR+Z15	5.2
16308	2	PL15×250	250	S235JR+Z15	14.7
16311	1	PL15×485	889	S235JR+Z15	46.1
16312	1	PL8×60	180	S235JR	0.7
16319	1	PL15×240	338	S235JR+Z15	9.5
16320	1	PL15×240	335	S235JR+Z15	9.5
16341	1	PL6×328	329	S235JR	2.2
16350	1	HEA300	4496	S235JR	355.0
16352	1	HEA300	5346	S235JR	422.4
16362	1	HEA300	1259	S235JR	111.2
16393	2	PL8×100	260	S235JR	3.3
16398	2	PL8×80	266	S235JR	2.7
16414	2	PL8×100	266	S235JR	3.3
16416	1	PL8×76	100	S235JR	0.5
16417	1	PL8×100	176	S235JR	1.1
16418	1	PL8×266	763	S235JR	12.1
16421	1	PL8×59	86	S235JR	0.3
16422	1	PL8×100	260	S235JR	1.3
16425	1	PL8×100	105	S235JR	0.7
16435	2	PL8×137	260	S235JR	4.4
16530	1	PL8×266	340	S235JR	5.3
16546	1	PL5×39	260	S235JR	0.4
				SUM	1596.7

REV.	MODIFICATION	DATE	PREPARED	DATE	CHECKED	DATE	RELEASED
–	FIRST ISSUE	03.08.2018	Cervinka	03.08.2018	Malvald	03.08.2018	Schwindacki

PROJECT: Seawater FGD Unit 3 — PLANT: Vasilikos Power Station - SWFGD, Vasilikos 13

PART: ESP - SUPPORTING STRUCTURE — PROJECT № C-01-830697-141-2804-102

MAIN PROFILE: HEA300

DRAWING № / ASSEMBLY №: 904 — REV.: – — SCALE: 1:10 1:5 — FORMAT: A0

ALLCONS Industry s.r.o.
Zlatá Studna 1
CZ Praha 2
18100 Praha 8
Czech Republic
tel. +420 242 408 120
fax. +420 242 408 140
e-mail: allcons@allcons.cz

Tekla Structures