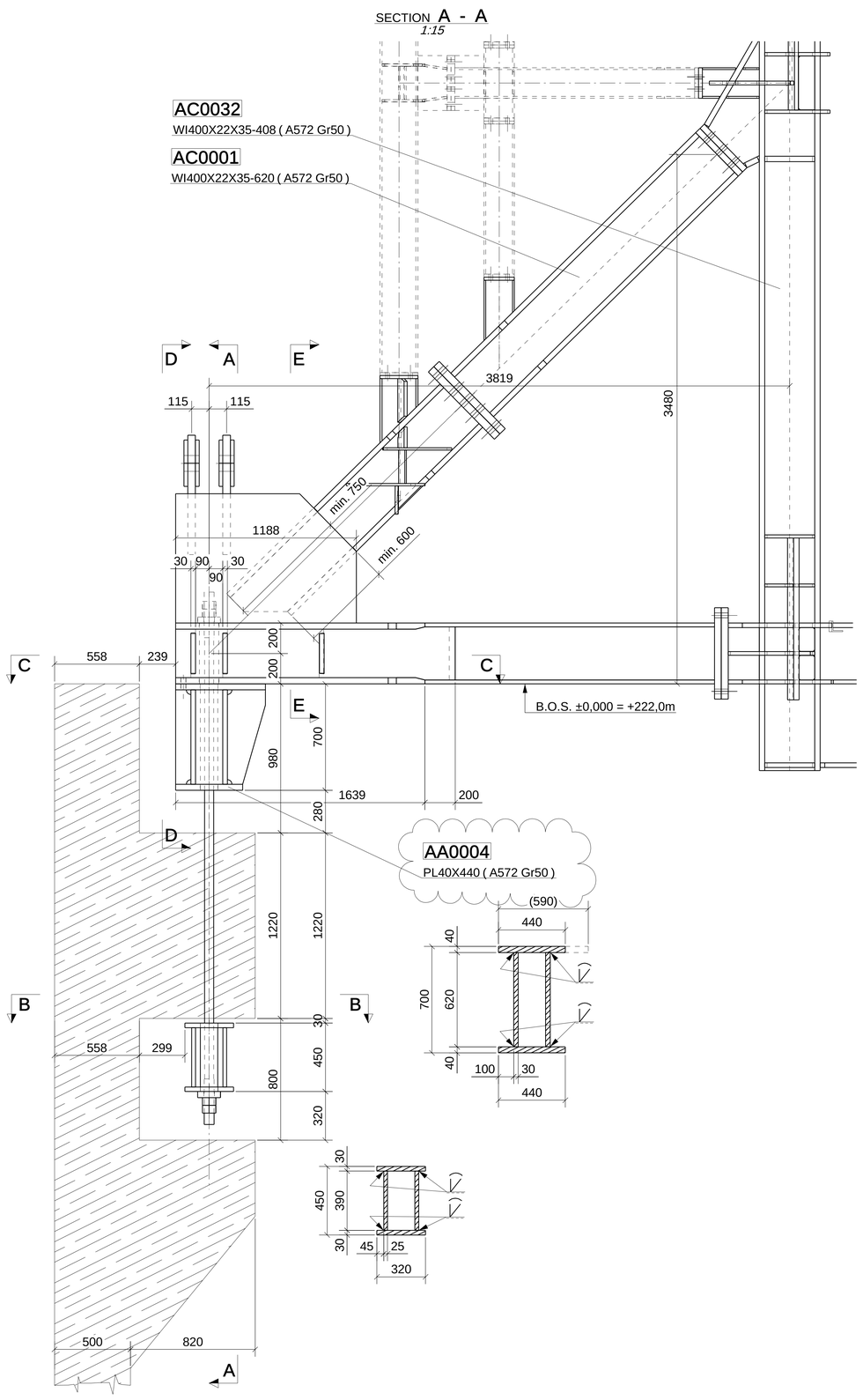

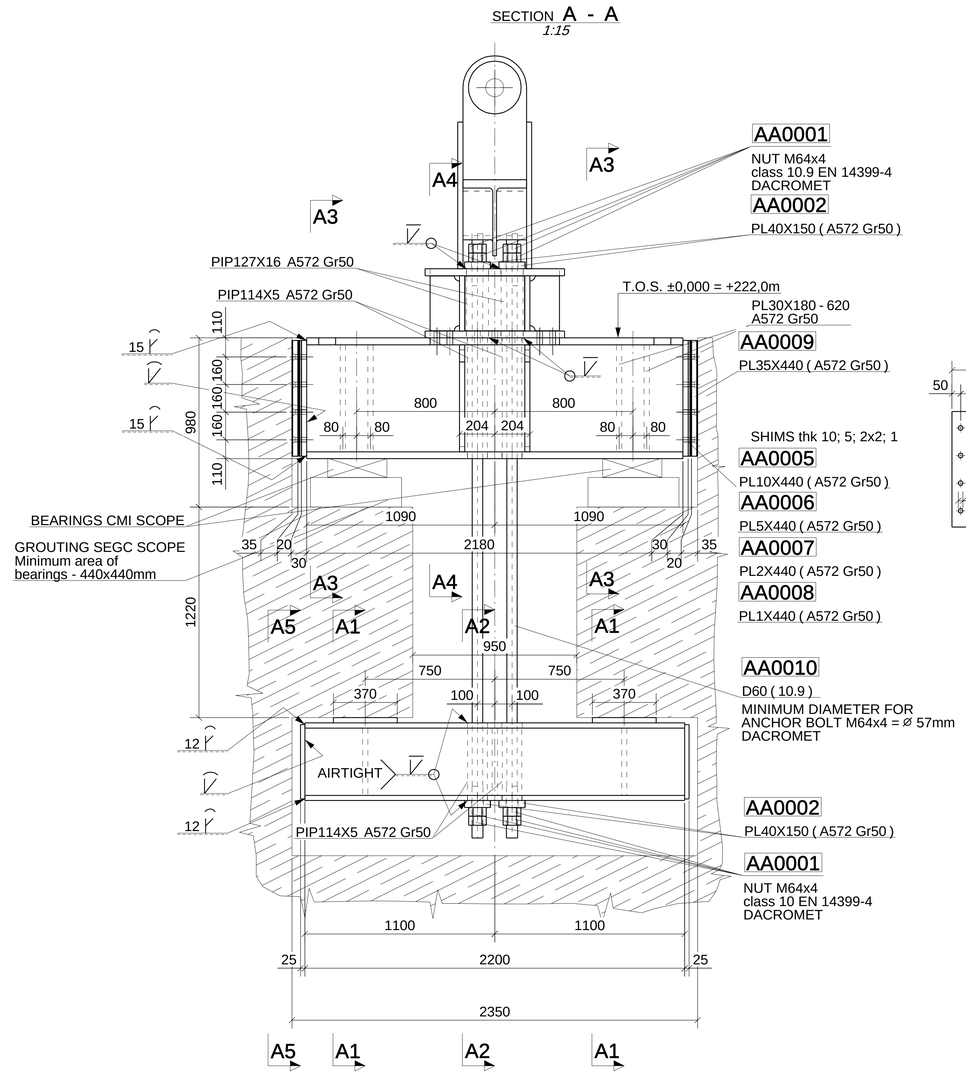

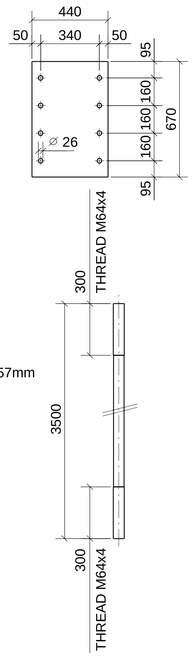

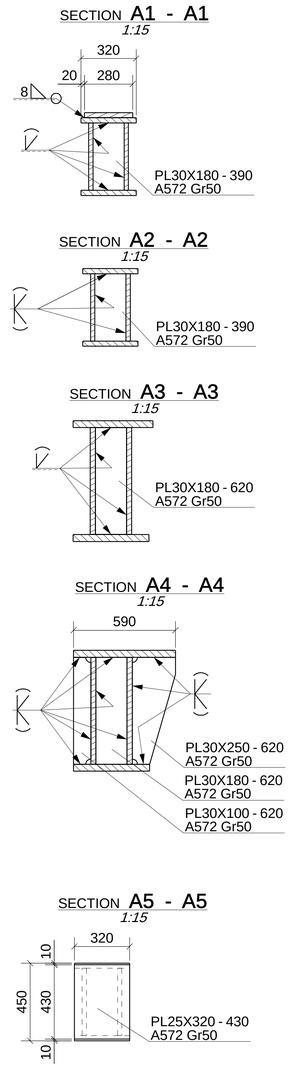

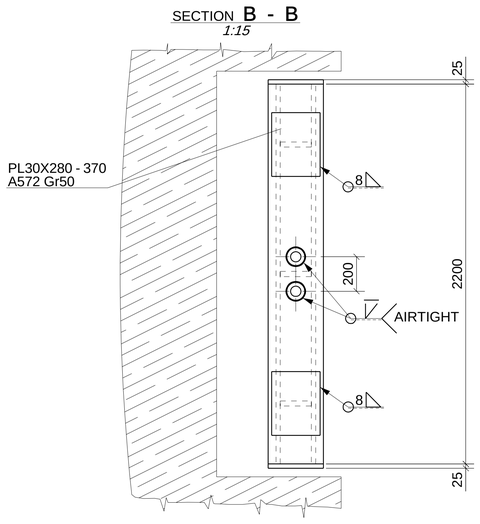

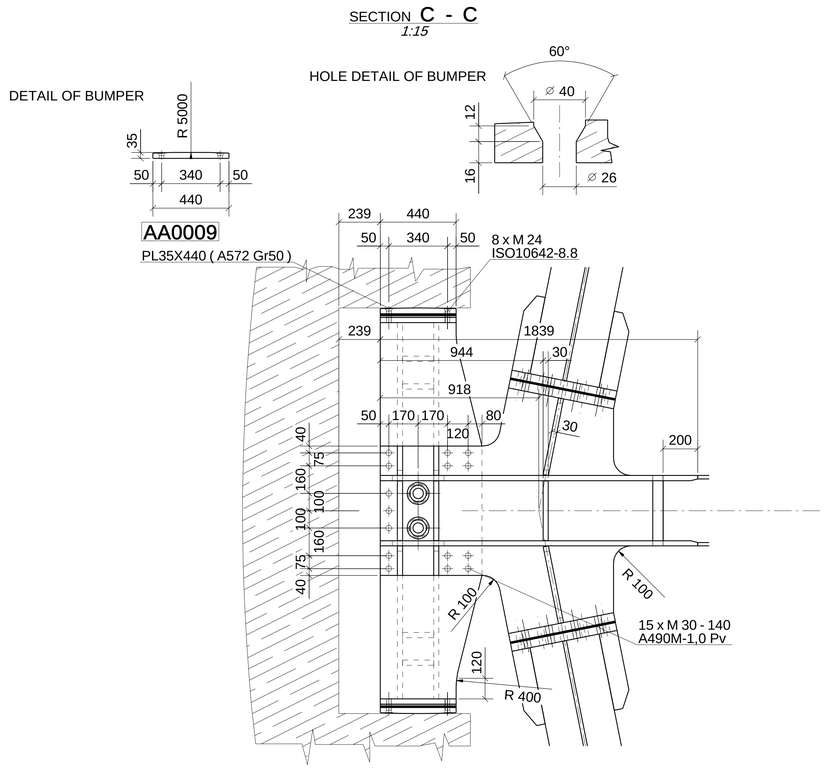

MANUFACTURING SEQUENCE

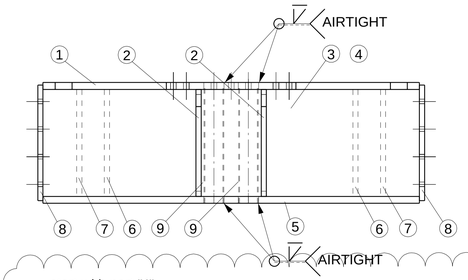
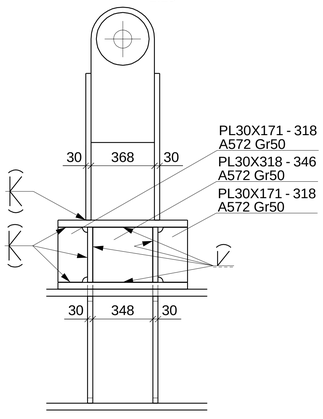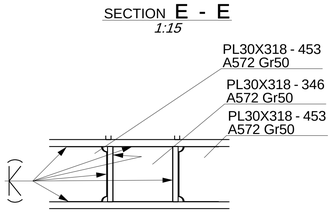
- start with part "1"
- welded part "2" (inner stiffeners) by K weld to part "1"
- welded parts "3, 4" by 1/2V weld to part "1"
- welded part "2" by K weld to parts "3, 4"
- welded part "5" by 1/2V weld to parts "3, 4"
- welded parts "6" by 1/2V weld to parts "1, 3, 4, 5"
- welded parts "7" by 1/2V weld to parts "1, 3, 4, 5"
- welded parts "8"
- welded part "2" (outer stiffeners) by K weld to part "1, 3, 4, 5"
- welded part "9" by airtight weld to part "1, 5"