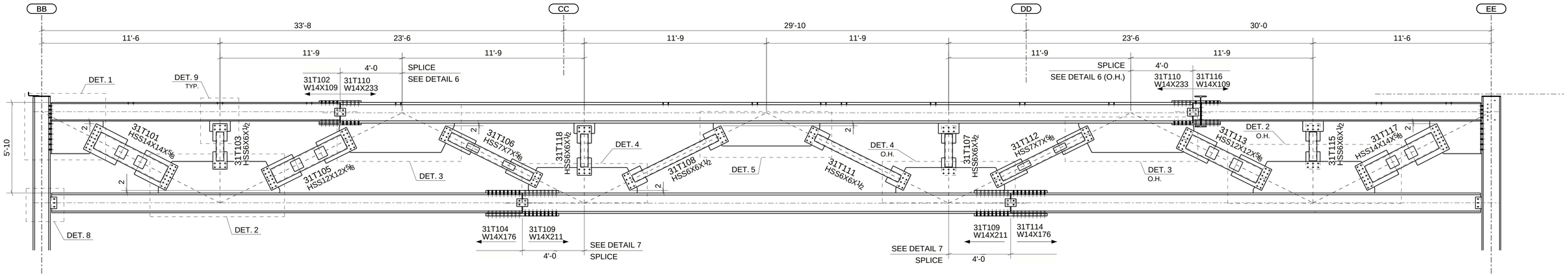

JUNIOR BALLROOM TRUSS ELEVATION

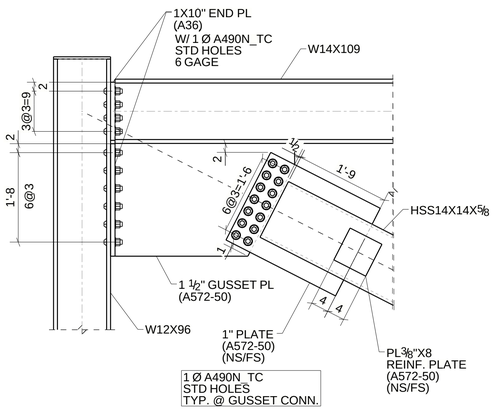

1 DETAIL REF: SK-01B

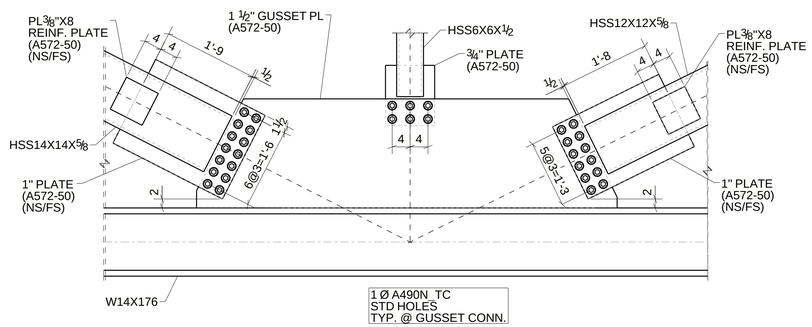

2 DETAIL REF: 2/SK-01B

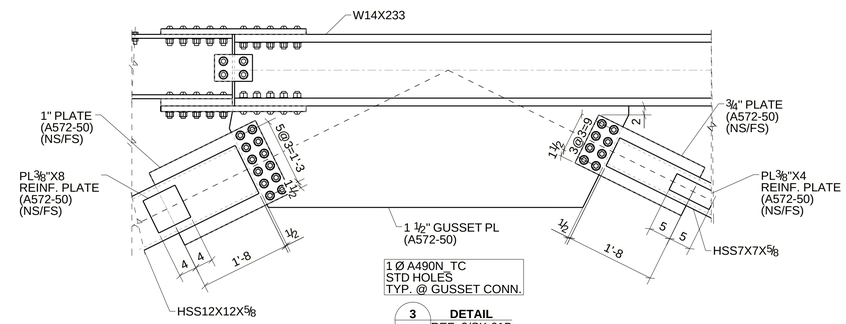

3 DETAIL REF: 3/SK-01B

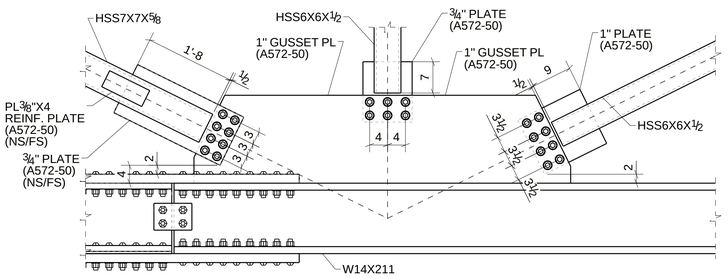

4 DETAIL REF: 4/SK-01C

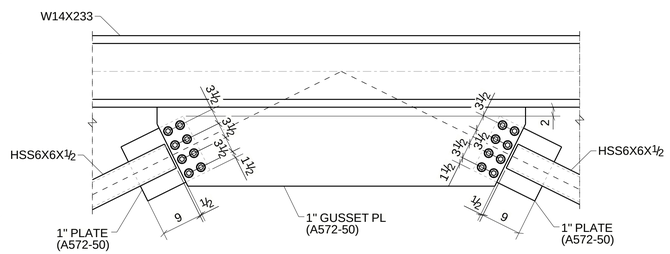

5 DETAIL REF: 5/SK-01C

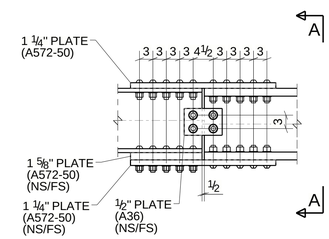

6 DETAIL REF: 6/SK-01D

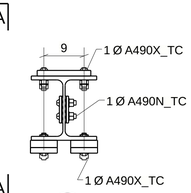

A SECTION REF: 6/SK-01D

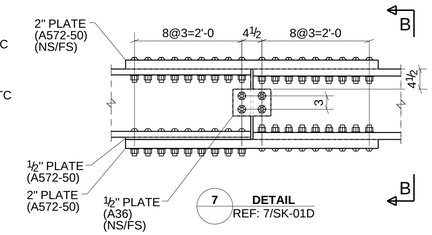

7 DETAIL REF: 7/SK-01D

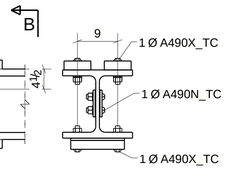

B SECTION REF: 7/SK-01D

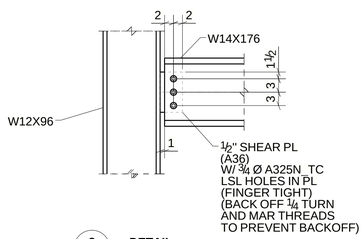

8 DETAIL REF: 8/SK-01D

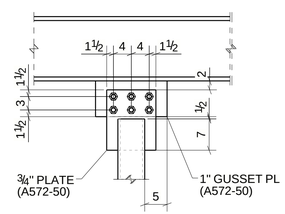

9 DETAIL REF: 9/SK-01D

REV.	DATE	DESCRIPTION
0	07/28/21	RELEASED FOR CONSTRUCTION
A	06/30/21	ISSUED FOR APPROVAL

REVISION AND ISSUE RECORD

Takis Structures