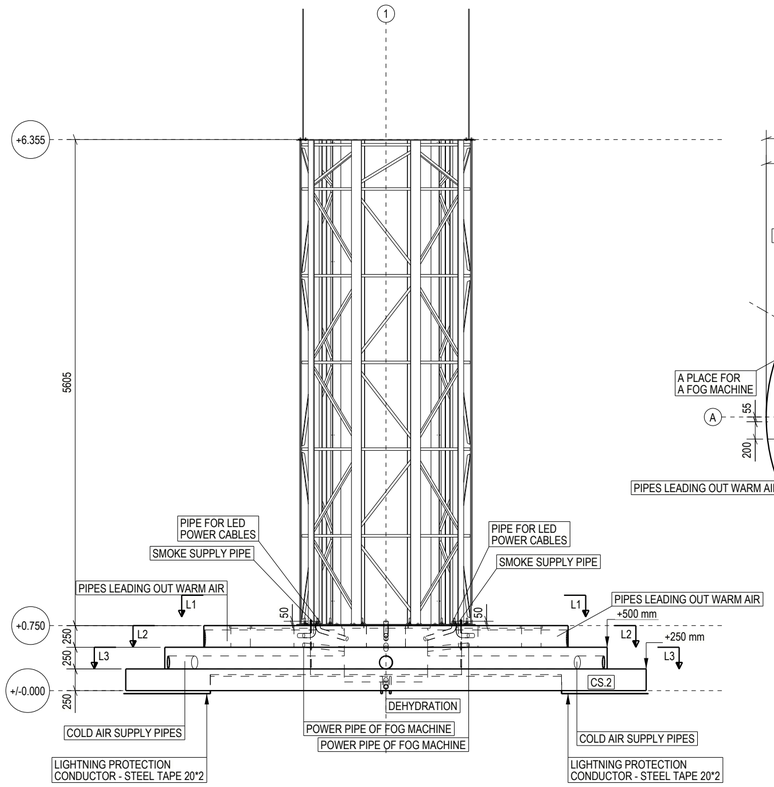

SECTION A - A
1:50

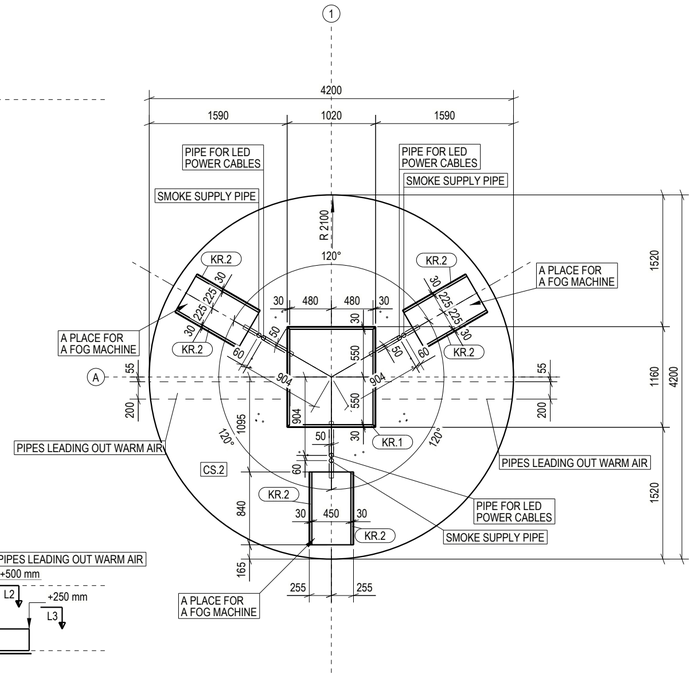

LEVEL L1 - L1
1:50

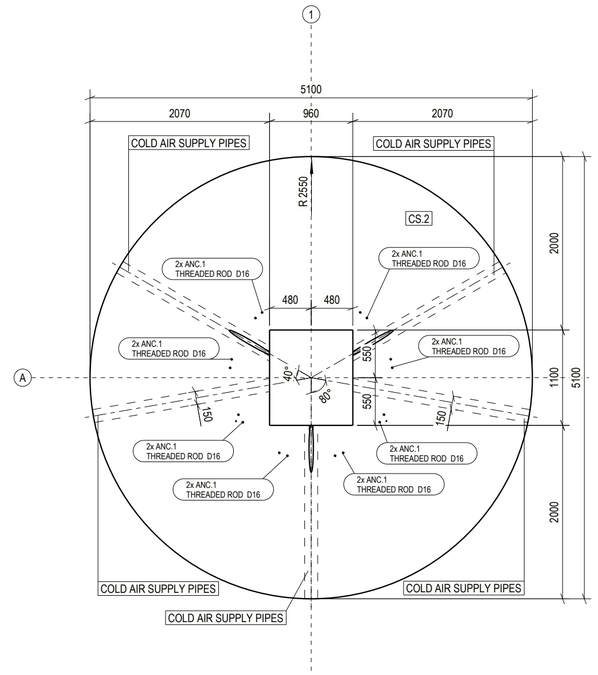

LEVEL L2 - L2
1:50

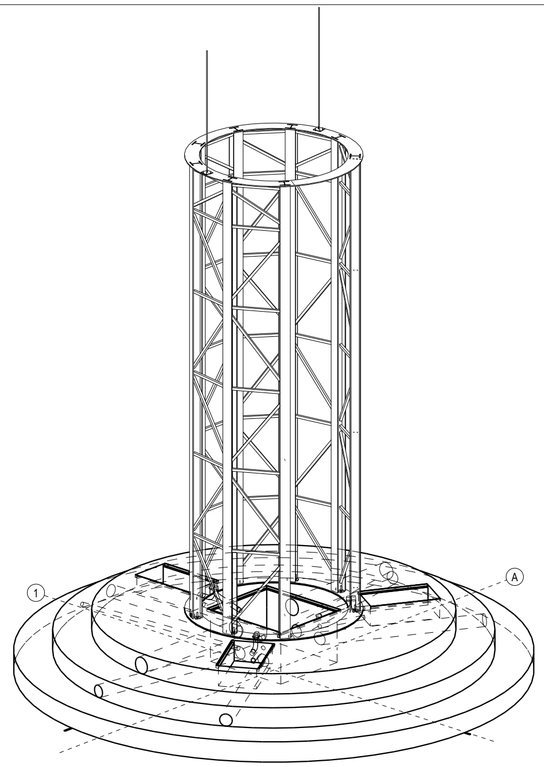

AXONOMETRY
1:50

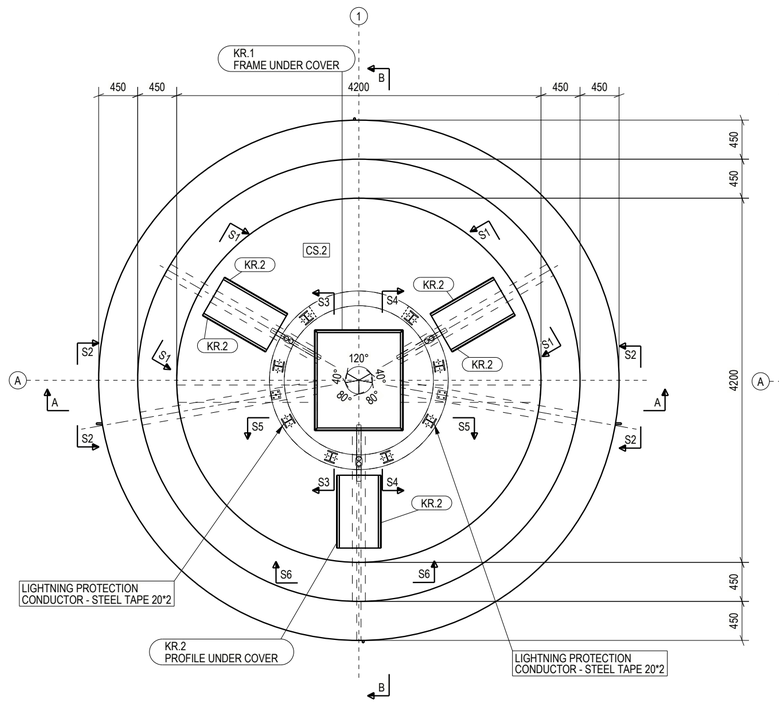

TOP VIEW
1:50

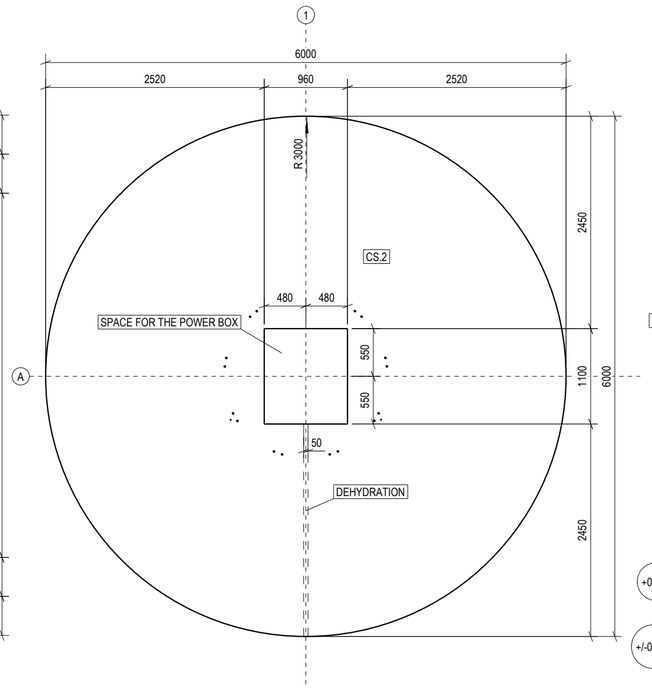

LEVEL L3 - L3
1:50

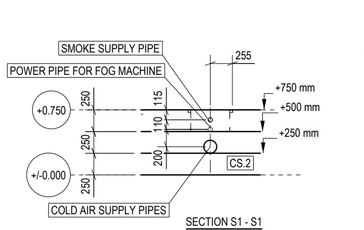

SECTION S1 - S1
1:50

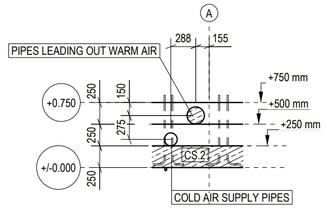

SECTION S2 - S2
1:50

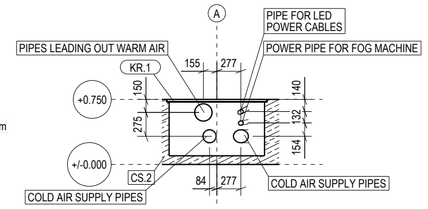

SECTION S3 - S3
1:50

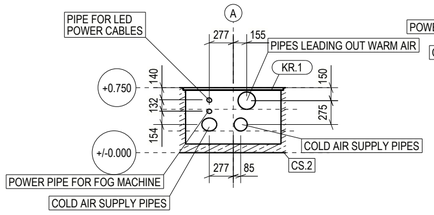

SECTION S4 - S4
1:50

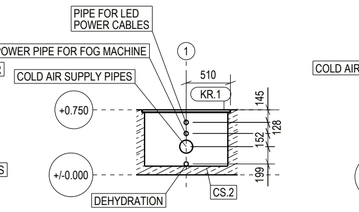

SECTION S5 - S5
1:50

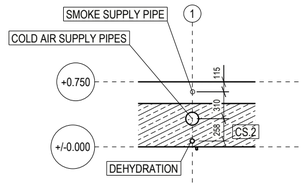

SECTION S6 - S6
1:50

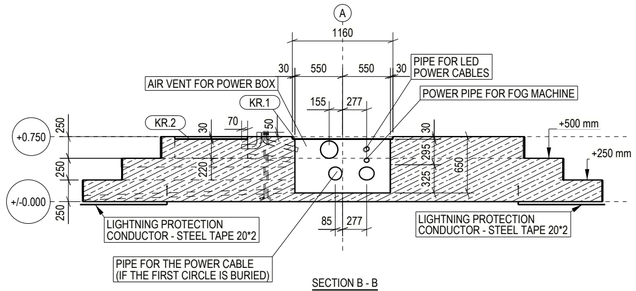

SECTION B - B
1:50

COMMENTS
1) CONCRETE CLASS : C30/37
2) NOMINAL COVER : 30mm

No	REV MARK	REVISION DESCRIPTION	REV. DATE
1	0	FIRST ISSUE	23.12.2020

MATERIAL LIST FOR 1 REINFORCED CONCRETE OBJECT CS.2 Z 1 TO COMPLETE

Object	Size (mm x mm)	Material	Qty.	Length (mm)	Volume (m3)	Weight (kg)
	250*4200	C30/37	1	4200.0	2.80	6710.6
	250*6000	C30/37	1	6000.0	6.90	16551.7
	250*5100	C30/37	1	5100.0	4.66	11178.5
			Total for 1	object	14.35	34440.8

OMNIKON
INDUSTRIAL DRYERS
GDAŃSKA 116/7, 90-520, ŁÓDŹ, POLAND
info@omnikon.pl
+48 42 632 44 73

PROJECT:
CUSTOMER:

DRAWING NAME	FORMWORK DRAWING - FOUNDATION		
PHASE	WORKSHOP DOCUMENTATION	DATE	SCALE
BRANCH	REINFORCED CONSTRUCTION	23.12.2020	1:50
DESIGN	M. Sc., Eng. Rafał Kossakowski M. Sc., Eng. Manuela Sobolewska	DRAWING NUMBER CS2-01 - 0	FORMAT A2

Tekla Structures