D - D

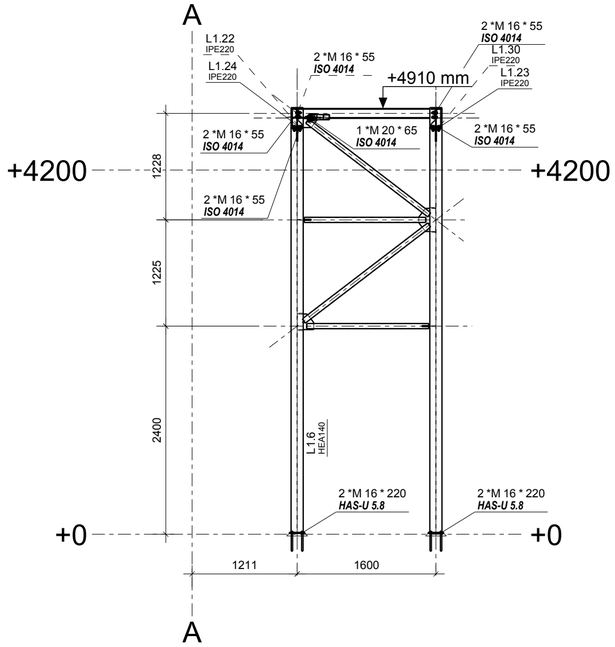

F - F

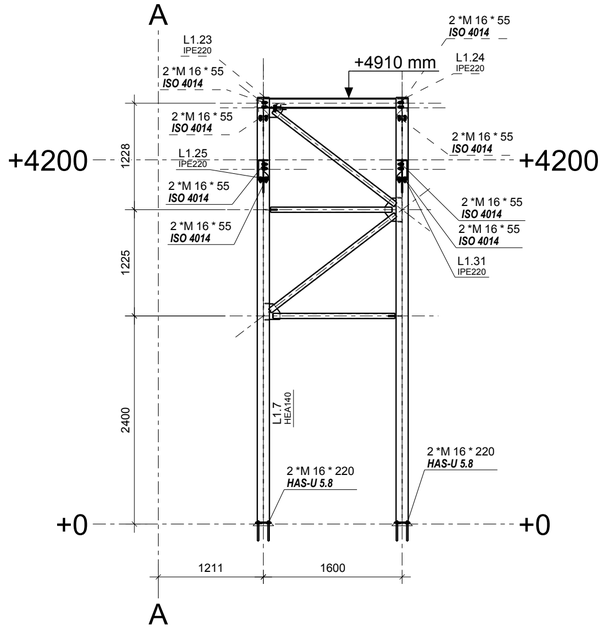

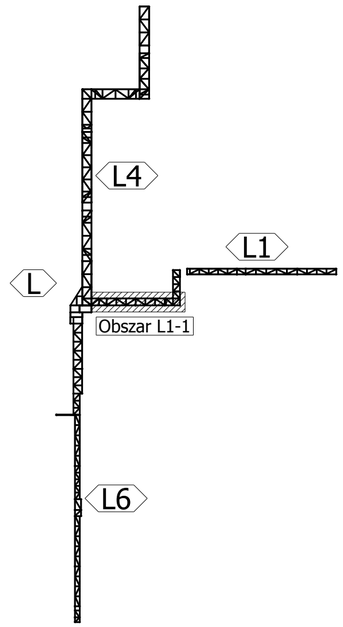

SCHEMAT
1:1000

E - E

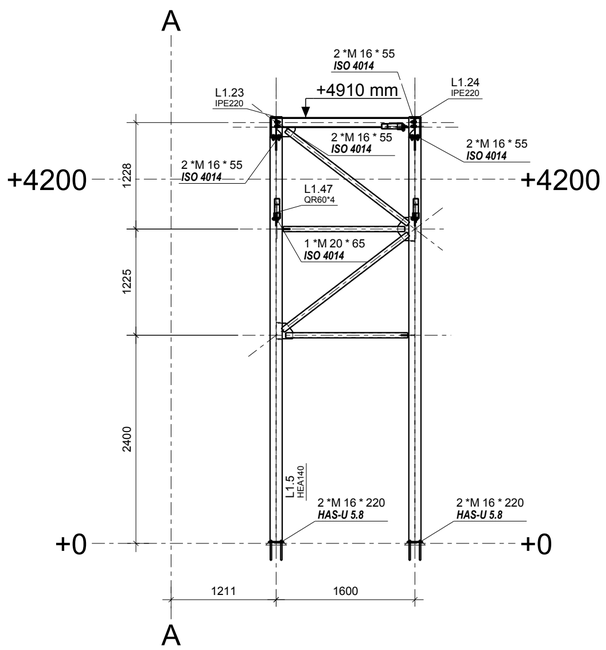

Tekla Structures